SWIMMING POOL HEAT PUMP UNITS
Installation & Instruction Manual
DURA+ ® - series

Rev. 1.04
17.02.2009

Contents

SWIMMING POOL HEAT PUMP UNITS 1

Contents 2

1. Preface 3

2. Specifications 4
2.1 Technical data sheet 4
2.2 Dimensions 5

3. Installation and connection 6
3.1 Remarks 6
3.2 Location of the heat pump 6
3.3 Distance from the pool 7
3.4 Installation of the check-valve 7
3.5 Typical setup 8
3.6 Adjusting the by-pass 8
3.7 Electrical hook-u p 9
3.8 First time start-up 10
3.9 Condensation 10

4. Use and operation 11
4.1 Features of the LED control panel 11
4.2 Setting the parameters 11
4.3 Checking the status 13
4.4 Setting the CLOCK 13

5. Protection systems
5.1 Water pressure switch 14
5.2 Refrigerant gas high and low pressure protection 14
5.3 Overheating protection on the compressor 14
5.4 Automatic defrost control 14
5.5 Temperature difference between inflowing and outflowing water 14
5.6 Low temperature cut-out 14
5.7 Anti-frost protection during winter 15

6. Directions 16
6.1 Swimming pool water chemistry 16
6.2 Setting the flow switch 16
6.3 Heat pump winterizing 17
6.4 Restarting the pump after winter 17
6.5 Check-up 17

7. Maintenance and inspection 18
7.1 Maintenance 18
7.2 Troubleshooting guide 18
7.3 Overview of possible error codes displayed on the screen 21
7.4 Check list for installation 22

8. Detailed specifications 23
8.1 Electrical diagrams 23
8.2 Refrigeration diagram 25

9. Warranty and RMA (return material authorization) 26
9.1 Warranty 26
9.2 RMA Request Form 27

1. Preface

In order to provide our customers with quality, reliability and versatility, this product has been made according to strict production standards. This manual includes all necessary information about installation, start-up, winterizing and maintenance. Please read this manual carefully before opening or servicing the unit. The unit must be installed by qualified personnel. The following conditions apply for the warranty to be valid:

- The heat pump can only be opened and serviced by a qualified installer.
- Operation and maintenance must be carried out according to the recommendations featured in this instruction manual.
- Use genuine standard spare parts only.

Failure to comply with these recommendations will invalidate the warranty.

The company will not be held responsible for damage or injury caused by improper installation or incorrect or unnecessary maintenance.

The Swimming Pool Heat Pump Unit heats the swimming pool water and keeps the temperature constant.

Our DURA+® heat pumps have the following characteristics:

1. Durability

The heat pump is equipped with a PVC & Titanium heat exchanger, which can withstand prolonged exposure to swimming pool water.

2. Easy installation

Before leaving our factory, all our heat pumps are thoroughly tested and made ready-to-use.
Only the water inlets and outlets and the electrical hook-up need to be taken care of when installing the unit.

3. Silent operation

An extremely efficient rotary/scroll compressor and a low-noise 2-speed fan guarantee silent operation of our heat pumps.

4. Advanced controlling

By means of the electronic control panel, all parameters can be set and the status of all measured variables can be displayed. Remote controlling can also be achieved.

2. Specifications

2.1 Technical data sheet

Unit	Model	DURA+22T	DURA+30T
Heating Capacity A25./W25	kW	22	30
	BTU/h	75000	102000
Heating capacity A15/W25	kW	20,7	28,0
	BTU/h	70600	95500
Cooling capacity A25/W25	kW	17,6	24
	BTU/h	60000	82000
Power Input	kW	3,67	5,0
Maximum volume	m3	95	130
Running Current	A	6,1	8,3
Max Running Current	A	7,1	9,5
COP at A25/W25		6,0	6,0
COP at A15/W25		5,5	5,5
Power Supply	V/Ph/Hz	380/3/50	380/3/50
Controller		Electronic control	
Condenser		Titanium heat exchanger	
Compressor Quantity		1	1
Compressor type		Scroll	Scroll
Refrigerant		R410a	R410a
High air flow	M3/h	4500	4500
Low air flow	M3/h	3800	3800
Fan quantity		1	1
Fan Power Input	W	215	215
Fan Speed	RPM	820/680	820/680
Fan Direction		Vertical	Vertical
Noise	dB(A)	57	57
Water Connection	mm	50	50
Nominal Water Flow	m3/h	12,5	17
Water Pressure Drop (max)	kPa	40	40
Unit Net Dimensions	L/W/H mm	660/660/960	660/660/960
Unit Shipping Dimensions	L/W/H mm	700/740/1110	700/740/1110
Net Weight / Shipping Weight	Kg	112/122	123/133

Measuring conditions: Outdoor air temp: 25°C , Inflowing water temp: 25°C, rel. humidity: 65%

2.2 Dimensions

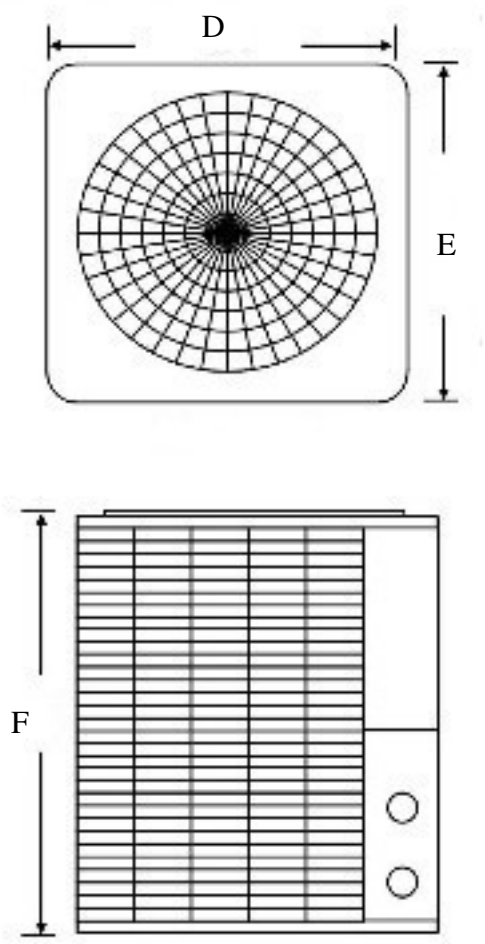

Model	D(mm)	E(mm)	F(mm)
DURA+22T	660	660	960
DURA+30T	660	660	960

3. Installation and connection

3.1 Remarks

The factory only provides the heat pump unit; the other parts, including a contingent by-pass, are to be provided by the user or the installer.
Attention:
Please take the following steps when installing the heat pump:

1. Each addition of chemicals has to be performed through the conduits located **downstream** of the heat pump.
2. Install a by-pass when the flow of the pool pump exceeds the authorized flow through the heat exchanger of the heat pump with 20%.
3. Install the heat pump above the pool's water level.
4. Always place the heat pump on a solid base and use the supplied silent blocks in order to avoid vibrations and noise.
5. Always keep the heat pump in upright position. If the unit has been tilted, you should wait for at least 24 hours before turning it on.

3.2 Location of the heat pump

The unit will perform well on any location provided three factors are present:

1. Fresh air - 2. Electricity - 3. Pool filter piping

The unit may be installed virtually anywhere **outdoors** providing minimum distance requirements are met with respect to other objects (see diagram below). For indoor pools please consult your installer. If the unit is placed in a windy area, no problems occur with e.g. the pilot light, as opposed to what is often the case with gas heaters.

ATTENTION: Do not place the unit in an enclosed area with a limited air volume where the unit's discharged air will be re-circulated or near shrubs that could block the air inlet. These locations deny the unit a continuous fresh air supply, which reduces its efficiency and may prevent adequate heat yield.
See diagram below for minimum required distances.

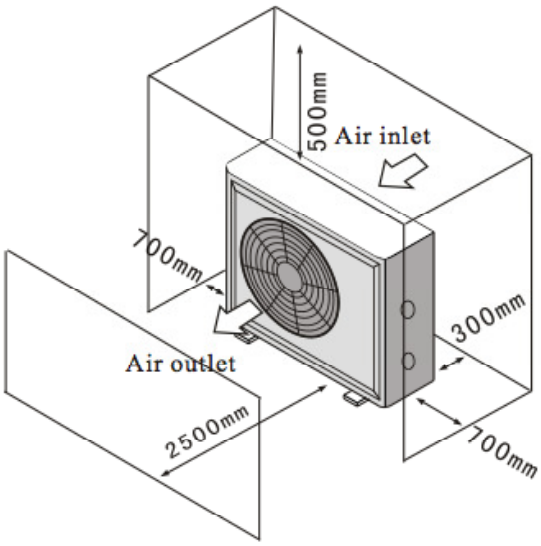

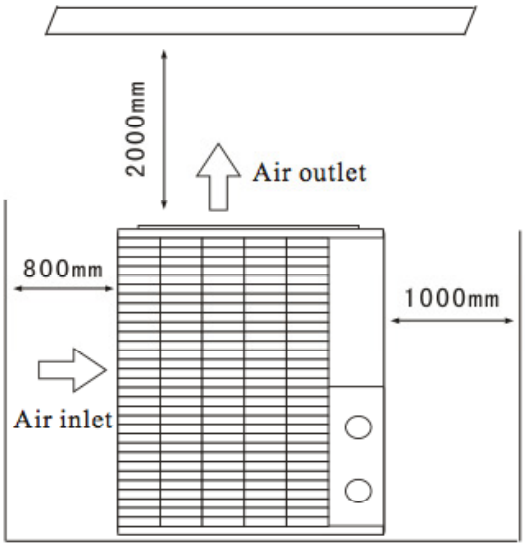

3.3 Distance from the pool

Normally, the pool heat pump is installed within a 7.5 meter radius of the pool. The greater the distance from the pool, the greater the heat loss from the piping. Since the piping is buried for the most part, heat loss is minimal for distances of up to 30 meters (15 meters to and from the pump = 30 meters total), unless the soil is wet or the water level is high. Heat loss per 30 meters could roughly be estimated at 0.6 kW-hour (2000 BTU) for every 5 °C temperature difference between the pool water and the soil surrounding the pipe, which translates to an operation time increase of 3 to 5 %.

3.4 Installation of the check-valve

Attention – When using automatic chlorine and pH dosage systems, it is of uttermost importance to protect the heat pump from high concentrations of these chemicals that could corrode the heat exchanger. Therefore, such systems should add the chemicals in the conduits located DOWNSTREAM of the heat pump and it is recommended to install a check-valve in order to prevent backflow when there is no water circulation.
Damage to the heat pump caused by disregarding any of these recommendations will invalidate the warranty.

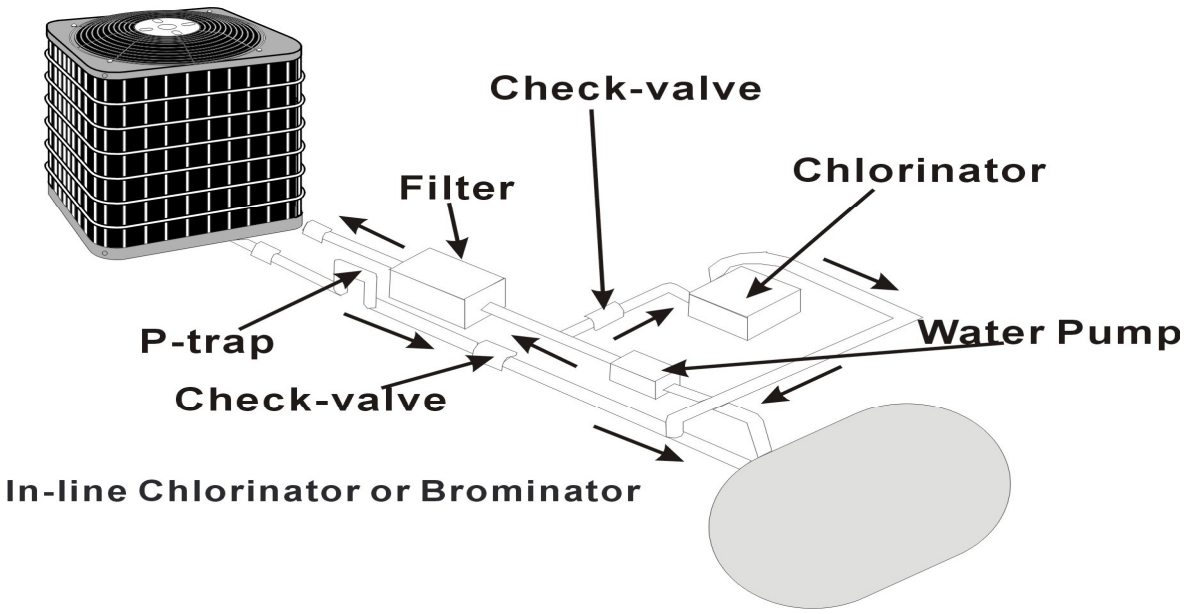

3.5 Typical setup

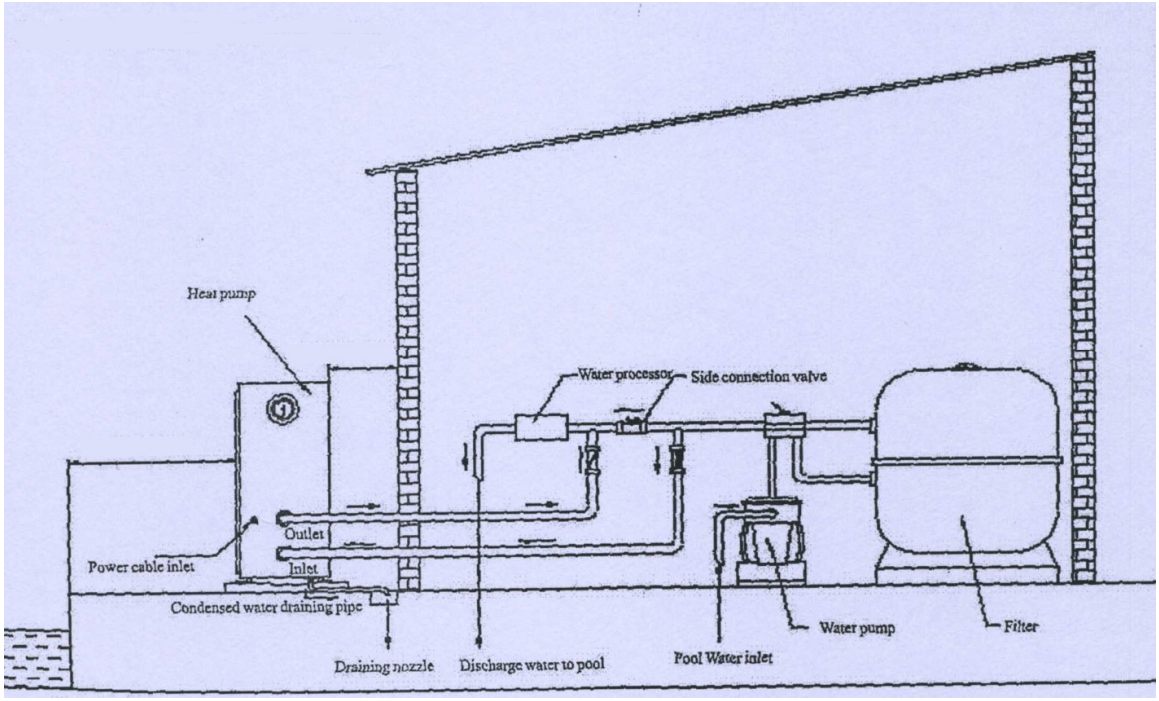

Note – This setup is just an example

3.6 Adjusting the by-pass

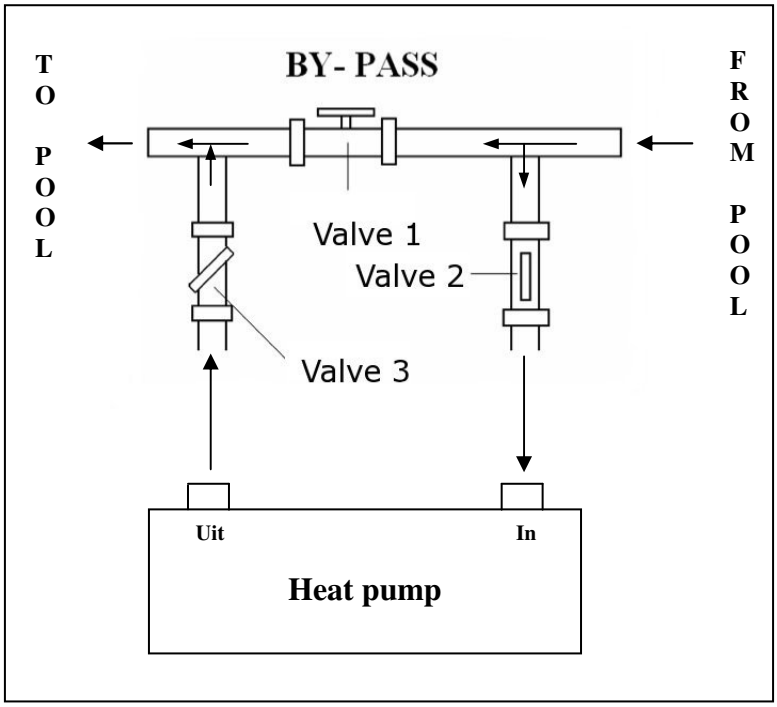

Adjust the by-pass as follows:

- open the 3 valves completely
- slightly close valve 1 until water pressure has increased with approximately 100 to 200 grams (see also 3.8)
- close valve 3 about halfway to adjust the pressure of the refrigerant gas in the unit.

Optimum heat pump operation is reached when the refrigerant gas reaches a pressure of 20 +/- 2 bar.
This pressure can be read from the pressure gauge located next to the control panel of the heat pump. The adjustment also makes sure that optimum water flow is reached in the unit.

Note – The absence of a by-pass or performing an inadequate by-pass adjustment may cause the heat pump to function less well or may even damage it, which will invalidate the warranty.

3.7 Electrical hook-up

Important - Although the heat pump is electrically isolated from the rest of the unit, this only prevents the passage of electricity to or from the pool water. Grounding the unit is still required to protect yourself from short circuits inside the unit. Make for adequate ground connection.

Check if the electrical mains voltage corresponds with the operating voltage of the heat pump prior to hooking up the unit.
It is recommended to use a separate fuse (slow type – D-curve) as well as adequate wiring (see table below).
Connect the electrical wires with the terminal block labelled 'POWER SUPPLY'.

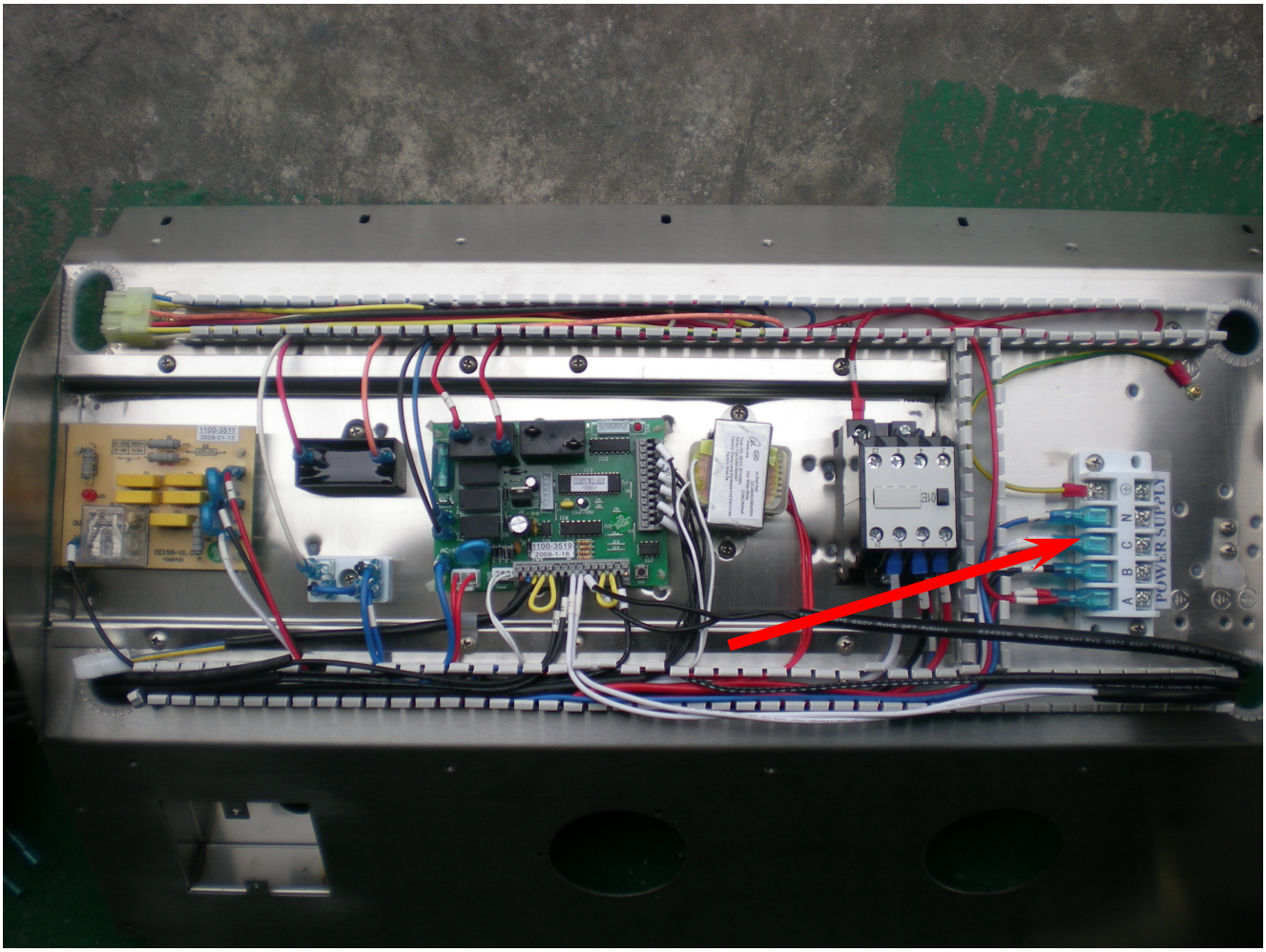

Remark – For models with 3 phases, switching 2 phases may cause an inversion in the rotational direction of electrical motors, which could damage the unit. Therefore, a protection device has been built in, which will interrupt the circuit if the connection has not been performed correctly. If you see an EE 4 error light up on the display, **2 phase wires have to be switched**.

Model	Voltage (volt)	Fuse (A)	Nominal current (A)	Cable diameter (mm^2) (for a max. length of 15 meters)
DURA+22T	3x 380	20	6,1	4*2.5 + 2.5
DURA+30T	3x 380	20	8,3	4*2,5 + 2.5

3.8 First time start-up

Note - In order for the unit to heat the pool (or spa), the filter pump must be running so that the water can circulate through the heat pump. Without this circulation, the heat pump will not start.

When all connections have been made and checked, you should follow these steps:

1. Turn on the filter pump. Check for leaks and verify flow to and from the pool.
2. Turn on the electrical power supply to the unit, then press the ON/OFF key "⏻" on the electronic control panel. The unit should start when the time delay period has lapsed (see further).
3. When the unit has been running for a couple of minutes, check if the air leaving the unit is cooler.
4. Check the performance of the flow switch as follows: with the unit running, turn the filter pump off. The unit should also switch off automatically. If not, the flow switch must be readjusted. (see further under 6.2).
5. Allow the unit and filter pump to run 24 hours a day until the desired pool water temperature is reached. When the set temperature is reached, the unit switches itself off. The unit will now automatically restart (as long as your filter pump is running) when the temperature of the pool water experiences a drop of more than 1 °C below the set temperature.

Depending on the starting temperature of the pool water and the air temperature, it can take several days for the water to reach the desired temperature. Covering the pool can drastically reduce this period.

Water pressure switch – the unit is equipped with a pressure switch that is switched on when enough water pressure is detected in the unit and that is switched off when the water pressure becomes too low (e.g. when the filter pump is switched off). If the pool water level is located more than one meter above or below the heat pump, your installer may need to adjust this pressure switch (see further under 6.2).

Time delay – the unit is equipped with a built-in 3-minute start delay included to protect electrical components and contacts. After this time delay, the unit will automatically be restarted. Even a brief interruption of the power supply will activate the start delay and prevent the unit from starting immediately. Additional interruptions of the power supply during the delay period will have no effect on the 3-minute countdown.

3.9 Condensation

When the swimming pool water is being heated by the heat pump, the incoming air is cooled down quite a bit, which can cause condensation on the fins of the evaporator. Condensed volumes can attain several litres per hour under high atmospheric humidity. Sometimes, this is wrongfully interpreted as a water leak.

4. Use and operation

4.1 Features of the LED control panel

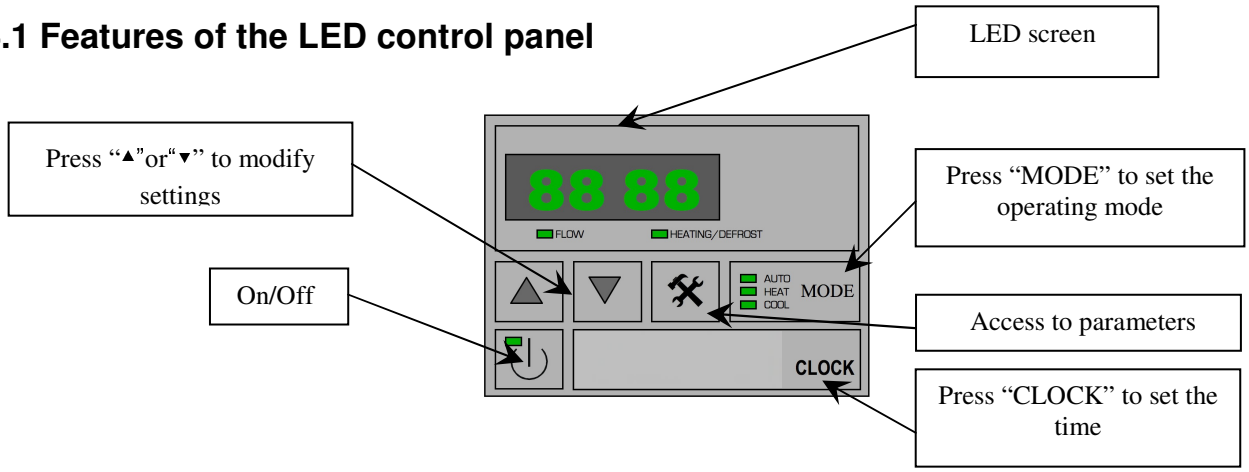

With the "On/Off" key "⏻", the heat pump is turned on or turned off (stand-by status). If the LED next to this key lights up, the heat pump is turned ON.

Setting the desired temperature of the swimming pool water is achieved with the arrow keys, regardless if the heat pump is turned ON or OFF. You simply press the arrow keys to set the desired temperature **directly**.

- When the unit is turned ON and is running, the temperature of the swimming pool water can be read off the LED screen.
- When the unit is turned ON and the desired temperature is reached, "OFF" appears on the LED screen.
- When the unit is turned OFF, "OFF" is always displayed on the LED screen; the heat pump goes on monitoring all parameters of the system and all protection systems remain active. The heat pump is thus in STAND-BY mode. We will continue using this expression if we wish to indicate that the heat pump is turned OFF.

4.2 Setting the parameters

Parameters can always be checked by pressing the service key "🛠", regardless if the pump is turned ON or is in STAND-BY mode. **Only** in STAND-BY mode can the parameters be modified.

This is an overview of the different parameters and their standard values.

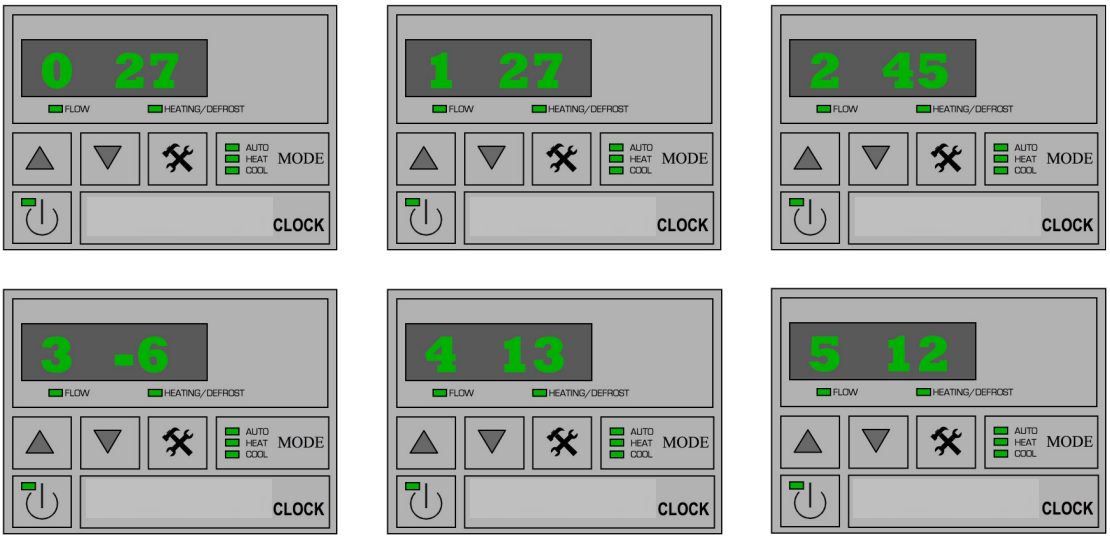

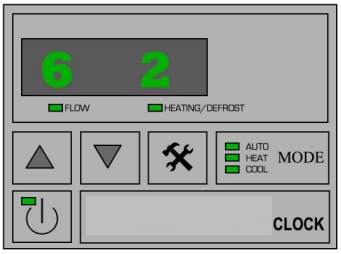

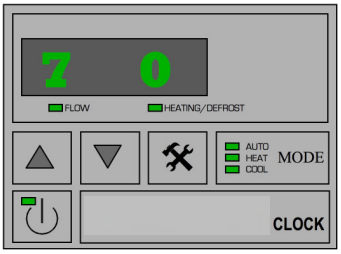

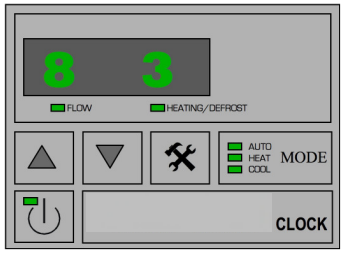

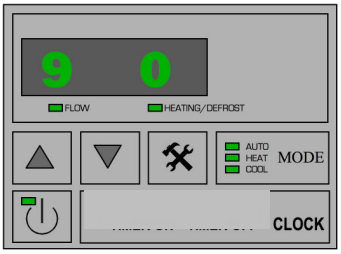

The first number on the LED screen stands for the number of the parameter and the second one for its value.

Parameter	Description	Standard
0	Desired temperature in cooling mode (6 ⇒ 28°C)	20°C
1	Desired temperature in heating mode (6 ⇒ 40°C)	27°C
2	Operation time of the compressor before defrosting mode starts (30 ⇒ 90 minutes)	45 min
3	Temperature of evaporator at which defrosting starts (-30 ⇒ 0°C)	-7°C
4	Temperature of evaporator at which defrosting stops (2 ⇒ 30°C)	13°C
5	Maximum duration of defrosting procedure (0 ⇒ 12 min)	8 min
6	Mode of electronic expansion valve (0 for ‘MAN’ and 1 for ‘AUTO’)	1
7	Memory function for automatic start-up (0 for ‘NO’ and 1 for ‘YES’)	1
8	Operating mode (see table below)	1
9	Desired temp. in Auto mode (6 ⇒ 40°C)	27
10	Not used	
11	Target Superheat	3
12	Manual Control for EE valve (15 ⇒ 47 steps)	35
13	Temp. of inflowing water	
14	Temp. of outflowing water	
15	Temp. of evaporator	
16	Return gas temp.	
17	Ambient temp.	
18	Temp. of condensor	
19	Actual open steps of EE valve	

Parameters 2 up to and including 5 are the settings for the automatic defrosting mode. They have been set from the factory for optimal operation and **very rarely** need to be adjusted by a specialized technician, that is, only if conditions demand it.

Parameter 6 indicates the mode of the electronic expansion valve. When put in AUTO mode ‘1’ the valve is controlled by temperature. If put in MAN mode ‘0’ the valve is controlled by the stepping motor, which can be controlled by parameter 12.

Parameter 7 indicates if the heat pump should or shouldn’t start automatically after an interruption of the power supply.

Parameter 8 is for adjusting the **possible** operating modes of the heat pump.

Value for parameter 8	Possible modes	Can be selected with "Mode" key
0	Cooling only	
1	Cooling or heating	Yes
2	Cooling or heating + electrical heating	Yes
3	Heating only	

Parameter 9 is for setting the desired temperature when the heat pump is in AUTO mode. Heat pump is in AUTO mode when parameter 8 has the value '1' or '2'.

Parameter 11 controls the opening/closing of the expansion valve. This can be controlled from –20 to 20°C and has a standard value of 3°C.

Parameters are modified as follows:

- Set the heat pump in its STAND-BY mode.
- Press the service key "🛠"to access the parameter menu. The parameter number and its value will blink simultaneously.
- Press the arrow key "▲"or"▼" to select the desired parameter.
- Then press "MODE" and "⏻" simultaneously. Now, only the value of the parameter will be blinking.
- Then select the desired setting with the arrow key "▲"or"▼".
- Stop for 5 seconds or press the service key to save the new setting. The LED screen will again display "OFF".

Only parameters 0 and 1 (depending on the selected mode) are set directly with "▲" or "▼"

4.3 Checking the status

Further down in the parameter menu, after numbers from 0 to 12, you encounter parameters 13 to 19.
These cannot be modified. They indicate the values the unit is currently measuring for these parameters.

Parameter	Measured value
13	Temperature of inflowing water
14	Temperature of outflowing water
15	Temperature of evaporator
16	Temperature of returning gas
17	Ambient temperature
18	Temperature of condenser
19	Position stepper motor

4.4 Setting the CLOCK

- Start setting the clock by pressing the "CLOCK" key. The LED screen will display the time and the hours will start to blink.
- Press "▲"or"▼" to set the desired hour.
- Press "CLOCK" again. Now, the minutes start blinking.
- Press "▲"or"▼" again to set the minutes.
- Press "CLOCK" again to save the settings.

5. Protection systems

DURA+® heat pumps are equipped with the following standard protection systems:

5.1 Water pressure switch

Thanks to this pressure switch, the heat pump will not work when the filter pump is not working (and the water is not circulating). This system prevents the heat pump from heating only the water present in the heat pump itself. The protection also stops the heat pump if water circulation is cut off or stopped.

5.2 Refrigerant gas high and low pressure protection

The high pressure protection makes sure the heat pump is not damaged in case of overpressurisation of the gas. The low pressure protection emits a signal when refrigerant is escaping from the conduits and the unit cannot be kept running.

5.3 Overheating protection on the compressor

This protection protects the compressor from overheating.

5.4 Automatic defrost control

When the air is very humid and cold, ice can form on the evaporator. In that event, a thin layer of ice appears that will grow increasingly bigger as long as the heat pump is running. When the temperature of the evaporator has become too low, automatic defrost control will be activated, which will reverse the heat pump cycle so that hot refrigerant gas is sent through the evaporator during a brief period of time to defrost it.

5.5 Temperature difference between inflowing and outflowing water

During normal operation of the heat pump, the temperature difference between inflowing and outflowing water will approximate 1 to 2 °C. In the event that the pressure switch does not work and that the water stops circulating, the temperature probe monitoring the outflowing water will always detect a rise in temperature. As soon as the temperature difference between inflowing and outflowing water exceeds 13 °C, the heat pump will be automatically turned off.

5.6 Low temperature cut-out

If, during cooling, the temperature of the outflowing water reaches 5 °C or drops below this temperature, the heat pump will turn itself off until the water temperature reaches or exceeds 7 °C again.

5.7 Anti-frost protection during winter

This protection can only be activated if the heat pump is in STAND-BY mode.

5.7.1 First anti-frost protection

If the filter pump is controlled by the heat pump (regardless of the value for parameter 9) and when the water temperature lies between 2 and 4 °C and the air temperature is lower than 0 °C, the filter pump will be automatically turned on to prevent the water from freezing in the piping. This protection is deactivated when the temperature rises again.

5.7.2 Second anti-frost protection

If the water temperature drops even more, that is, below 2 °C (during long frost periods), the heat pump will also start running to heat the water until its temperature approximates 3 °C. When this temperature is reached, the heat pump will stop, but anti-frost protection will remain active until conditions change.

5.8 3-fase protection

If the phases are connected in the wrong order due to electrical miswiring, this protection will interrupt the power supply to prevent mechanical deformation. There will be an EE 4 error code on the display.

6. Directions

6.1 Swimming pool water chemistry

Special attention should be paid to the chemical balance of the pool water. The pool water values should always stay within the following limits:

	Min.	Max.
pH	7.0	7.4
Free chlorine (mg/l)	0.5	1.2
TAC (mg/l)	80	120
Salt (g/l)		3

Important: failure to comply with these limits will invalidate the warranty.

Note: exceeding one or several limits can damage the heat pump beyond repair. Always install water treatment equipment past the heat pump's water outlet, especially if the chemicals are automatically added to the water.
A check-valve should also be installed between the outlet of the heat pump and this equipment in order to prevent products from flowing back into the heat pump if the filter pump stops.

6.2 Setting the flow switch

The water flow switch is set to 0.14 bar by default. As from this water pressure value, the heat pump will be able to function. This is the minimum required water pressure for most installations.
This setting may only be modified if the heat pump does not start running despite sufficient water circulation or if it does not stop when the filter pump stops.
Always make sure that the water filter is clean before adjusting the settings of the flow switch: a dirty filter will lower the water flow and hamper correct adjustment of the flow switch settings.
Directions:

1. Check that all valves are opened so that water can run through the heat pump. Start the filter pump.
2. Start the heat pump.
3. If the heat pump does not start after the time delay, there might not be enough water circulation. Investigate and correct contingent circulation problems prior to adjusting the flow switch.
4. Remove the heat pump's access panel. The flow switch is located on the lower right.
5. Turn the screw on the flow switch slowly in anticlockwise direction. Wait for the time delay.
6. Repeat step 5 until the heat pump starts running.
7. Once the heat pump is running, stop the filter pump. The heat pump should immediately turn itself off.
8. If the heat pump does not turn itself off, the screw should be turned clockwise until the heat pump stops.
9. Check once more if the flow switch functions correctly by turning the filter pump on and off.

6.3 Heat pump winterizing

Important: failure to take the necessary precautions for winterizing can damage the heat pump, which will invalidate the warranty.

The heat pump, filter pump, filter and conduits must be protected in areas where the temperature can drop below the freezing point. Evacuate all water from the heat pump as follows:
1. interrupt the electrical power supply to the heat pump
2. close the water supply to the heat pump: completely close valves 2 and 3 of the by-pass
3. disconnect the water inlet and outlet coupler fittings of the heat pump and let the water drain out of the unit
4. loosely reattach water inlet and outlet coupler fittings to the heat pump in order to prevent dirt from getting into the conduits.

Note: these precautions should not be taken if you choose to use the built-in anti-frost protection.

6.4 Restarting the pump after winter

If you purged your heat pump for winterizing, you should undertake the following steps to restart it in spring:
1. check first if there is no dirt in the conduits and if there are no structural problems
2. check if the water inlet and outlet coupler fittings are adequately fastened to the heat pump
3. start the filter pump to start the water flow to the heat pump. Set the by-pass again.
4. reconnect the electrical power supply to the heat pump and turn it ON.

6.5 Check-up

DURA+® heat pumps have been developed and built to last, that is, if they have been installed correctly and can run under normal conditions. Regular check-ups are important if you want your heat pump to function safely and efficiently for years on end.
The following directions can help you achieve optimal results:
1. make for easy access to the service panel
2. keep the area surrounding the heat pump free of contingent organic waste
3. prune the vegetation near the heat pump so that there is enough free space around the pump
4. remove contingent water sprinklers from the vicinity of the heat pump. They can damage the heat pump.
5. prevent rain from directly running off a roof onto the heat pump. Install proper drainage.
6. do not use the heat pump if it has been flooded. Immediately contact a qualified technician to inspect the heat pump and repair it if should prove necessary.

Condensation can occur when the heat pump is running. This condensation can flow away through an opening in the base pan of the unit. The amount of condensation water will increase when atmospheric humidity is high. Remove any dirt that could possibly hamper the evacuation of condensation.
10 to 20 litres of condensation water can be produced while the unit is running. If more condensation is produced, stop the heat pump and wait for one hour before checking for leaks in the conduits.

NOTE: A quick way to verify that the water running through the condensation drain is indeed condensation, is to shut off the unit and keep the pool pump running. If the water stops running out of the condensation drain, it is condensation. AN EVEN QUICKER WAY is to TEST THE DRAIN WATER FOR CHLORINE. If no chlorine is detected, the drain water is a result of condensation.

Also take care to leave air inlet and exhaust passages free. Prevent exhaust air from immediately re-entering the unit through the inlet.

7. Maintenance and inspection

7.1 Maintenance

- Check the water inlet and drainage often. The water and air inflow into the system should be sufficient so that its performance and reliability does not get compromised. You should clean the pool filter regularly to avoid damage to the unit caused by clogging of the filter.
- The area around the unit should be spacious and well ventilated. Clean the sides of the heat pump regularly to maintain good heat exchange and to save energy.
- Check if all processes in the unit are operational and pay special attention to the operation pressure of the refrigerant system.
- Check the power supply and cable connections regularly. Should the unit begin to function abnormally or should you notice a smell from an electrical component, arrange for timely repair or replacement.
- Winterizing : make sure to purge all the water from the heat pump and other systems in order to prevent frost damage.
- You should also purge the water if the unit will not work for an extended period of time. You should check all parts of the unit thoroughly and completely fill the system with water before turning it on again afterwards.

7.2 Troubleshooting guide

Improper installation may result in an electrical discharge that could lead to death of – or serious injury to – pool users, installers or others due to electrical shock and may also cause damage to property.

DO NOT attempt to modify the internal configuration of the heat pump.

1. Keep your hands and hair clear of the fan blades to avoid injury.
2. If you are not familiar with your pool filtering system and heat pump:
   a. **Do not** attempt to adjust or service without consulting your dealer or your professional pool or air conditioning contractor.
   b. Read the entire installation and user manual before attempting to use, service or adjust the unit.
   c. Start the heat pump at least 24 hours after its installation in order to prevent damage to the compressor.

Nota: Switch off the power prior to maintenance or repairs.

Important remark: if a malfunction cannot be resolved immediately, **your installer** can contact our customer service. To be able to help you, we will need the **serial number** of your heat pump.
In order to analyse the problem itself, we will need to know the message (error code) that is displayed on the LED screen, as well as the values for the settings (parameters 0 to 12) and for the status of the heat pump (parameters 13 to 19) just before the failure or, if this is impossible, just after it.
Please keep this information at hand when calling our customer service. This information is also indispensable if you need to return a heat pump. Returning the unit should occur according to our **RMA procedure** guidelines.

On the following pages, you will find an overview of the different types of failure problems that can occur, along with directions to solve them.

Problem:	the heat pump doesn't work
Observation:	the screen does not light up and the fan/compressor doesn't make a sound
Possible cause	**Solution**
No electrical power supply	Check power supply (wiring, fuses, ...)

Problem:	the heat pump doesn't work
Observation:	the screen displays "OFF" and the LED next to "⏻" is **not** lit
Possible cause	**Solution**
The pump is in stand-by mode	Turn on the pump

Problem:	the heat pump doesn't work
Observation:	the screen displays "OFF" and the LED next to "⏻" **is** lit
Possible cause	**Solution**
1. The set temperature has been reached	1. No action required; all is well
2. The heat pump isn't functioning yet	2. Wait until the start time delay period has lapsed (3 minutes)

Problem:	the heat pump works but doesn't heat
Observation:	the compressor is running but the fan isn't and the "HEATING/DEFROST" LED is blinking
Possible cause	**Solution**
The defrosting cycle is running	No action required; all is well

Problem:	the heat pump works normally but there is no or insufficient heating
Observation:	the screen displays the temperature but no error codes
Possible cause	**Solution**
1. Insufficient capacity of the heat pump in proportion to the size of the swimming pool	1. Install a larger sized model or an extra heat pump. Cover the pool to limit heat loss
2. The compressor works but the fan doesn't	2. Check the electrical wiring of the fan. Replace the condenser or the fan motor if necessary.
3. The fan works but the compressor doesn't	3. Check the electrical wiring of the compressor. Replace the condenser or the compressor if necessary.
4. The heat pump has not been placed on an optimal location	4. Make for sufficient air circulation (see manual for details)
5. Faulty temperature setting	5. Set the correct temperature
6. By-pass not adjusted	6. Have the by-pass readjusted by the installer
7. Massive ice formation on the evaporator	7. Have the settings for automatic defrost control checked by the installer
8. Not enough refrigerant	8. Have the heat pump checked by a refrigeration technician

Problem:	the heat pump works normally but the water is cooling down instead of heating up
Observation:	the screen displays the temperature but no error codes
Possible cause	**Solution**
1. The wrong mode has been selected	1. Verify the parameters, select the correct mode
2. The controller is out of order	2. Check the voltage in the electrical wiring to the 4-way valve. If no electric potential is measured, replace the controller
3. The 4-way valve is out of order	3. Check the voltage in the electrical wiring to the 4-way valve. If electric potential is measured, replace the coil. If the problem persists, have the heat pump checked by a refrigeration technician

Problem:	the heat pump works but stops after a short while
Observation:	the screen displays “OFF”
Possible cause	**Solution**
1. Wrong setting of parameters	1. Check the settings of the parameters and modify if necessary

Problem:	the heat pump doesn’t stop
Observation:	the screen displays the temperature but no error codes
Possible cause	**Solution**
1. Wrong setting of parameters	1. Check the set parameters and adjust them if necessary (settings just above the capacity of the heat pump)
2. Pressure switch out of order	2. Check operation of the pressure switch by turning off the filter pump and restarting it. If the heat pump doesn’t react to this, the pressure switch must be adjusted or replaced.
3. Electrical failure	3. Contact your installer

Problem:	water leak
Observation:	there’s an amount of water under the heat pump
Possible cause	**Solution**
1. Condensation due to atmospheric humidity	1. No action required
2. Water leak	2. Try to localize the leak and check for the presence of chlorine in the water. If that is the case, the heat pump must be temporarily replaced during repair.

Problem:	abnormal amount of ice formed on the evaporator
Observation:	the evaporator is for the most part covered in ice
Possible cause	**Solution**
1. Insufficient air inflow	1. Check the location of the heat pump and remove any dirt that could be present on the evaporator
2. High water temperature	2. If the pool water is already quite hot (warmer than 29 °C), the probability of ice formation increases. Lowering the set temperature is a possible option.
3. Incorrect setting of automatic defrost control	3. Check the settings of the defrosting function together with your installer
4. The 4-way valve is out of order	4. Check the voltage in the electrical wiring to the 4-way valve. If electric potential is measured, replace the coil. If the problem persists, have the heat pump checked by a refrigeration technician.
5. Not enough refrigerant	5. Have the heat pump checked by a refrigeration technician.

7.3 Overview of possible error codes displayed on the screen

Go back to chapter 5 **"Protection systems"** for more detailed information.

The heat pump screen displays one of the following codes:

Display	Problem	Cause	Solution
PP1	"WATER IN" sensor out of order	Sensor open or short-circuited	Check or replace the sensor
PP2	"WATER OUT" sensor out of order	Sensor open or short-circuited	Check or replace the sensor
PP3	"PIPE" sensor out of order	Sensor open or short-circuited	Check or replace the sensor
PP4	"AIR" sensor out of order	Sensor open or short-circuited	Check or replace the sensor
PP6	Temperature difference between "WATER IN" and "WATER OUT" is too large	Insufficient water flow	Check the water flow
		Pressure switch out of order	Replace the pressure switch
PP7	Water temperature too low during cool-down	Insufficient water flow	Check the water flow
		Sensor "WATER OUT" displays an incorrect message	Check or replace the sensor
PP7	First anti-frost protection active	Low temperatures for water and air	No action required
PP7	Second anti-frost protection active	Low temperatures for water and air	No action required
PP8	Gas discharge sensor out of order	Sensor open or short-circuited	Check or replace the sensor
HP	High pressure protection	Insufficient water flow	Check the water flow
		Pressure switch out of order	Replace the pressure switch
		Too much refrigerant gas present	Have the heat pump checked by a refrigeration technician
LP	Low pressure protection	Not enough refrigerant gas	Have the heat pump checked by a refrigeration technician
		Leak in the cooling conduits	Have the heat pump checked by a refrigeration technician
FLO	Insufficient water flow	Insufficient water flow	Check the water flow
		Pressure switch out of order	Replace the pressure switch
EE4	Phase Protection	Faulty phase wiring	Put phases in order
EE5	The temperature difference between "WATER IN" and "WATER OUT" has been too large 3 times in a row	Insufficient water flow	Check the water flow
		Pressure switch out of order	Replace the pressure switch
EE6	Overheat protection for discharge gas	Insufficient water flow	Adjust water flow or check the bypass
EE8	Communication failure	No communication between the digital display and the system controller	Check the connection between the screen and the controller. Replace screen and/or controller.

7.4 Check list for installation

ATTENTION / OPGELET / ATTENTION / ACHTUNG

1. Free area / vrije ruimte / espace libre / freier platz

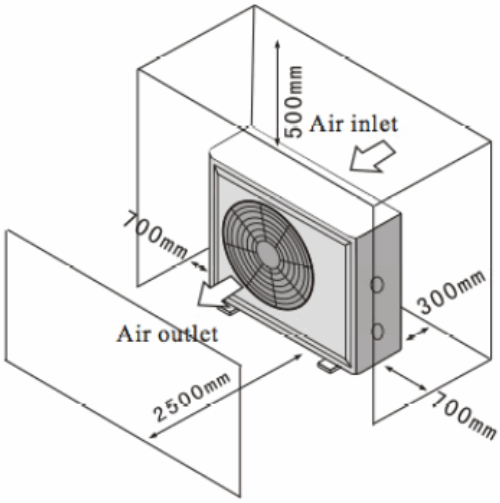

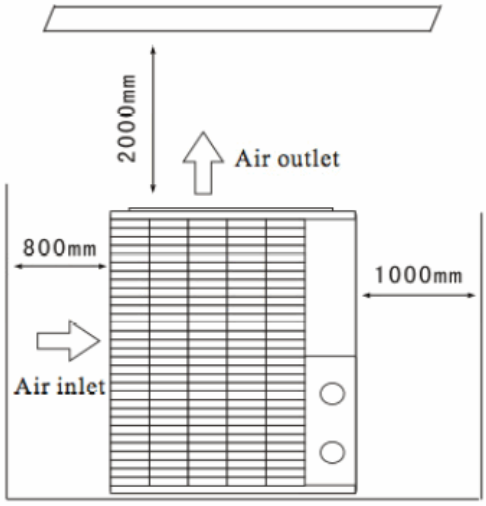

2. Install a by-pass / installeer een by-pass / installez un by-pass / installieren sie eine Überbrückung

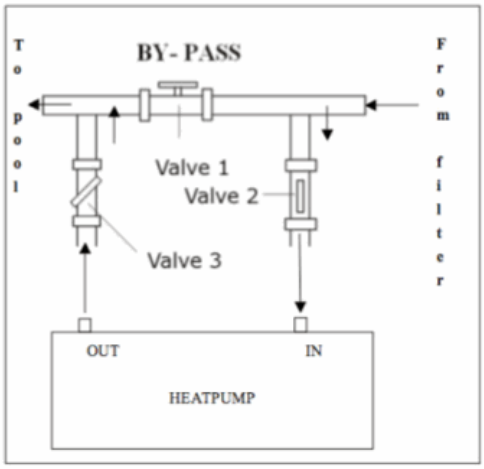

3. Electrical connection / elektrische aansluiting / raccordement électrique / elektrischer Anschluss

DURA+22T	3x 380V	20A	4*2,5 + 2,5mm^2
DURA+30T	3x 380V	20A	4*2,5 + 2,5 mm^2

Read the installation manual for more detailed instructions

Lees aandachtig de instructies in de installatiehandleiding

Lisez les instructions dans le manuel d'installation

Lesen sie die Anweisungen im Installation Handbuch

8. Detailed specifications

8.1 Electrical diagrams

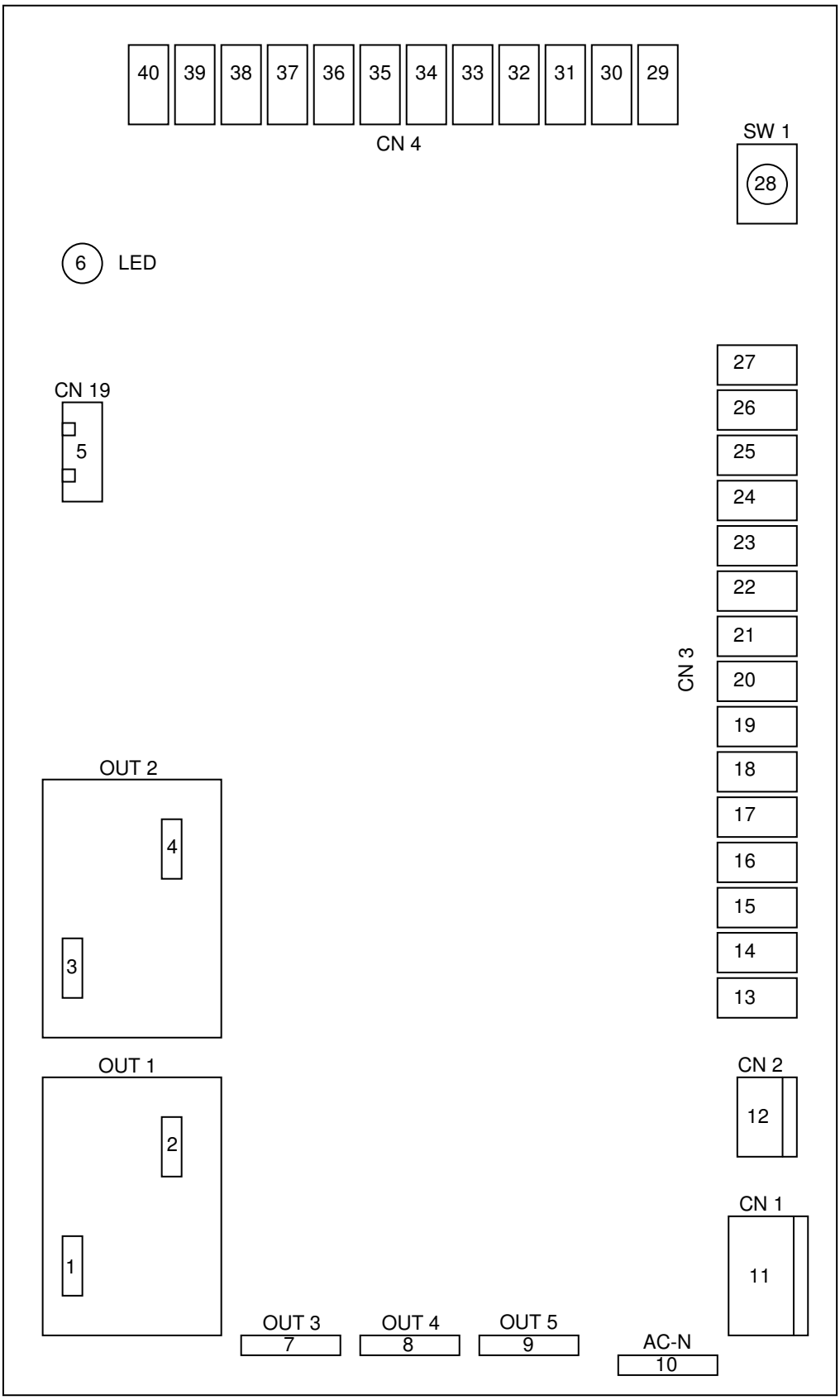

1	L Line Input	21	GND
2	Compressor Output	22	High Pressure Switch
3	L Line Input	23	GND
4	Electrical Heating Output	24	Mode Switch
5	EE Valve	25	GND
6	Running Indicator	26	Phase Protection
7	4-way valve output	27	GND
8	High Fan Output	28	Self-Inspection Button
9	Low Fan Output	29	Discharge Gas Temp Sensor
10	N Line Input	30	GND
11	Transformer Premier	31	Inflowing Temp Sensor
12	Transformer Minor	32	GND
13	12 V	33	Outflowing Temp Sensor
14	Communication Terminal	34	GND
15	GND	35	Pipe Temp Sensor
16	Emergency Switch	36	GND
17	GND	37	Ambient Temp Sensor
18	Flow Switch	38	GND
19	GND	39	Return Gas Temp Sensor
20	Low Pressure Switch	40	GND

8.2 Refrigeration diagram

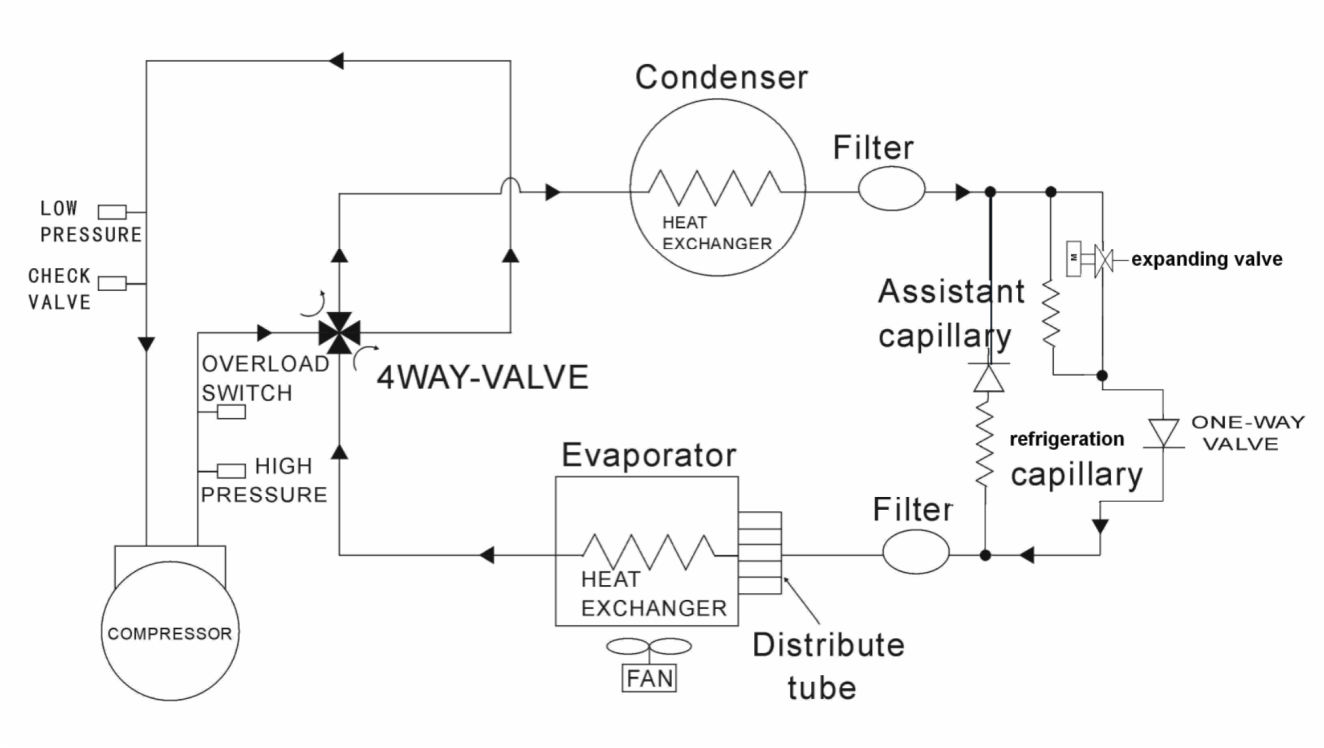

9. Warranty and RMA (return material authorization)

9.1 Warranty

LIMITED WARRANTY

Thank you for purchasing our heat pump.

We warrant all parts to be free from manufacturing defects in materials and workmanship for a period of two years from the date of retail purchase.

This warranty is limited to the first retail purchaser, is not transferable, and does not apply to products that have been moved from their original installation sites. The liability of Lamberts Pool Products shall not exceed the repair or replacement of defective parts and does not include any costs for labor to remove and reinstall the defective part, transportation to or from the factory, and any other materials required to make the repair. This warranty does not cover failures or malfunctions resulting from the following:

1. Failure to properly install, operate or maintain the product in accordance with our published "Installation & Instruction Manual" provided with the product.
2. The workmanship of any installer of the product.
3. Not maintaining a proper chemical balance in your pool **[pH level between 7,0 and 7,4. Total Alkalinity (TA) between 80 to 120 ppm. Free Chlorine between 0,5 – 1,2mg/l. Total Dissolved Solids (TDS) less than 1200 ppm. Salt maximum 3g/l]**
4. Abuse, alteration, accident, fire, flood, lightning, rodents, insects, negligence or acts of Gods.
5. Scaling, freezing or other conditions causing inadequate water circulation.
6. Operating the product at water flow rates outside the published minimum and maximum specifications.
7. Use of non-factory authorized parts or accessories in conjunction with the product.
8. Chemical contamination of combustion air or improper use of sanitizing chemicals, such as introducing sanitizing chemicals upstream of the heater and cleaner hose or through the skimmer.
9. Overheating, incorrect wire runs, improper electrical supply, collateral damage caused by failure of O-rings, DE grids or cartridge elements, or damage caused by running the pump with insufficient quantities of water.

LIMITATION OF LIABILITY
This is the only warranty given by Manufacturer. No one is authorized to make any other warranties on our behalf.
THIS WARRANTY IS IN LIEU OF ALL OTHER WARRANTIES, EXPRESSED OR IMPLIED, INCLUDING BUT NOT LIMITED TO ANY IMPLIED WARRANTY OF FITNESS FOR A PARTICULAR PURPOSE AND MERCHANTABILITY. WE EXPRESSLY DISCLAIM AND EXCLUDE ANY LIABILITY FOR CONSEQUENTIAL, INCIDENTAL, INDIRECT OR PUNITIVE DAMAGES FOR BREACH OF ANY EXPRESSED OR IMPLIED WARRANTY.
This warranty gives you specific legal rights, which may vary, by country.

WARRANTY CLAIMS
For prompt warranty consideration, contact your dealer and provide the following information: proof of purchase, model number, serial number and date of installation. The installer will contact the factory for instructions regarding the claim and to determine the location of the nearest service center.

All returned parts must have a **Return Material Authorization number** to be evaluated under the terms of this warranty.

9.2 RMA Request Form

Propulsion Systems bvba
Romeinse Baan 56
B-1785 Brussegem - Belgium
+32-2461 0253 Tel
+32-2706 5960 Fax
www.lambertspoolproducts.com

Company:				Date:	
Address:					
City:		Zip code:		Country:	
Contact:				Phone:	
	E-mail:			Fax:	

Propulsion Systems contact name:		Date:	

Internal use			
RMA #:			
Issued by:		Date:	

Return for: Copy of customer invoice attached? ☐

Other documents attached to RMA request? ☐	
Description of documents:	

Model no.:		Invoice no.:	
Serial no.:		Invoice date:	
Problem:			

Propulsion Systems warranty repair policy:

1. Returns must be shipped freight prepaid. All return shipping charges are your responsibility.
2. Propulsion Systems requires pre-authorization for the return of all products. Products not authorized for return shall be sent back to you at your expense.
3. Propulsion Systems will repair or replace the products and will ship all products free via a carrier of our choice.
4. We will ship, at your expense, via any express carrier service you request.

Return procedure:

1. Before calling for an RMA number, please make sure that you have correctly followed the installation instructions and operating procedures mentioned in the user guide.
2. Call our Return Merchandise Authorization department and request an RMA Request Form.
3. On the RMA Request Form, make sure you have filled in ALL the information fields.
4. For returns within the warranty period, you must add a copy of your original sales invoice to your customer.
5. Send RMA Request Form, sales invoice and other documents (pictures, …) to fax number +32-2-706.59.60 or e-mail address johan@propulsionsystems.be. An RMA number will be issued within 24 hours after proper documents have been received. Propulsion Systems may refuse to issue an RMA number in the event of failure to provide the information mentioned in item (3) and (4).
6. **The RMA number should be clearly written on the shipping label and on the label placed on the shipping box.**
7. All unlabeled or mismarked or illegibly marked products will be refused and returned, freight collect.
8. All packages, which appear to be damaged at the time of delivery to Propulsion Systems, will be refused "AS IS".
9. Please ascertain that the products sent to Propulsion Systems are the same products for which the number was issued. If the products do not match the products under the assigned RMA number, Propulsion Systems will return all products, freight collect.
10. No return lacking an RMA number will be accepted - absolutely without exception.
11. **The RMA number is only valid for 21 calendar days after authorization. We reserve the right to refuse returned items beyond 21 days from the date on which the RMA number was assigned.**

Out of warranty products:

Customers are responsible for the shipping and repair costs. The estimated repair costs will be given after diagnosis has been performed on the returned products.
Diagnostic charges amount to 50.00 € and up.